SET:	DESCRIPTION:	STAGE/LOCATION:	DATE:	SCALE:
AIR FORCE 1	HEADER SCHEME	LONGCROSS - STAGE - MEGANOVA	14/04/2023	1/2"=1' , 1"=1' & FS - PRINTED @ ARCH E EXTENDED TO 1450MM

DWG 316-072

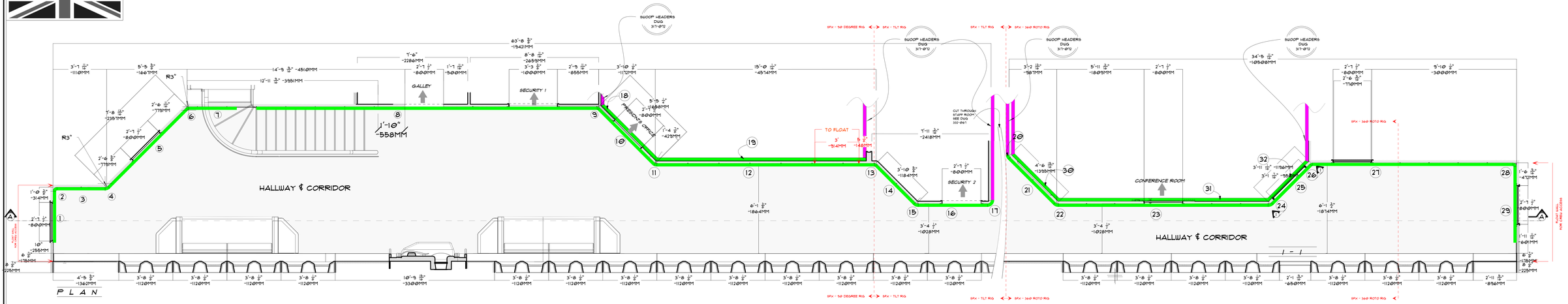

RUNNING HEADER PARTS - 1" TO 1'

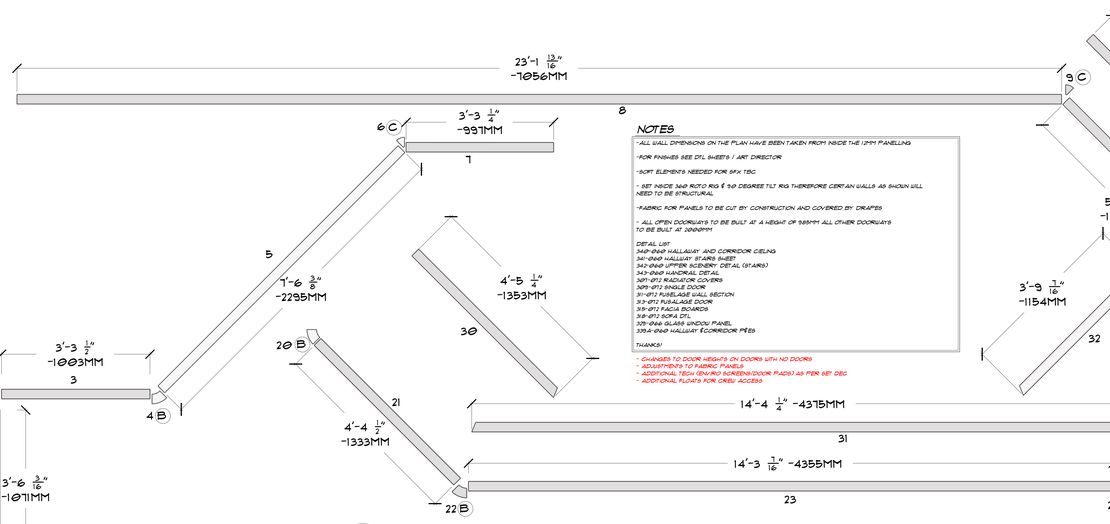

NOTES

- ALL WALL DIMENSIONS ON THE PLAN HAVE BEEN TAKEN FROM INSIDE THE 12MM PANELLING
- FOR FINISHES SEE DTL SHEETS 1 / ART DIRECTOR
- SOFT ELEMENTS NEEDED FOR SFX TBC
- SET INSIDE 360 ROTO RIG & 90 DEGREE TILT RIG THEREFORE CERTAIN WALLS AS SHOWN WILL NEED TO BE STRUCTURAL
- FABRIC FOR PANELS TO BE CUT BY CONSTRUCTION AND COVERED BY DRAPES
- ALL OPEN DOORWAYS TO BE BUILT AT A HEIGHT OF 985MM ALL OTHER DOORWAYS TO BE BUILT AT 2000MM

DETAIL LIST
340-060 HALLWAY AND CORRIDOR CEILNG
341-060 HALLWAY STAIRS SHEET
342-060 UPPER SCENERY DETAIL (STAIRS)
343-060 HANDRAIL DETAIL
301-072 RADIATOR COVERS
302-072 SINGLE DOOR
311-072 FUSELAGE WALL SECTION
313-072 FUSELAGE DOOR
315-072 FACIA BOARDS
318-072 SOFA DTL
320-066 GLASS WINDOW PANEL
339A-060 HALLWAY ECORRIDOR PIES

THANKS!

- CHANGES TO DOOR HEIGHTS ON DOORS WITH NO DOORS
- ADJUSTMENTS TO FABRIC PANELS
- ADDITIONAL TECH (ENVIRO SCREENS/DOOR PADS) AS PER SET DEC
- ADDITIONAL FLOATS FOR CREW ACCESS

CORNER PARTS DETAILS AT FS

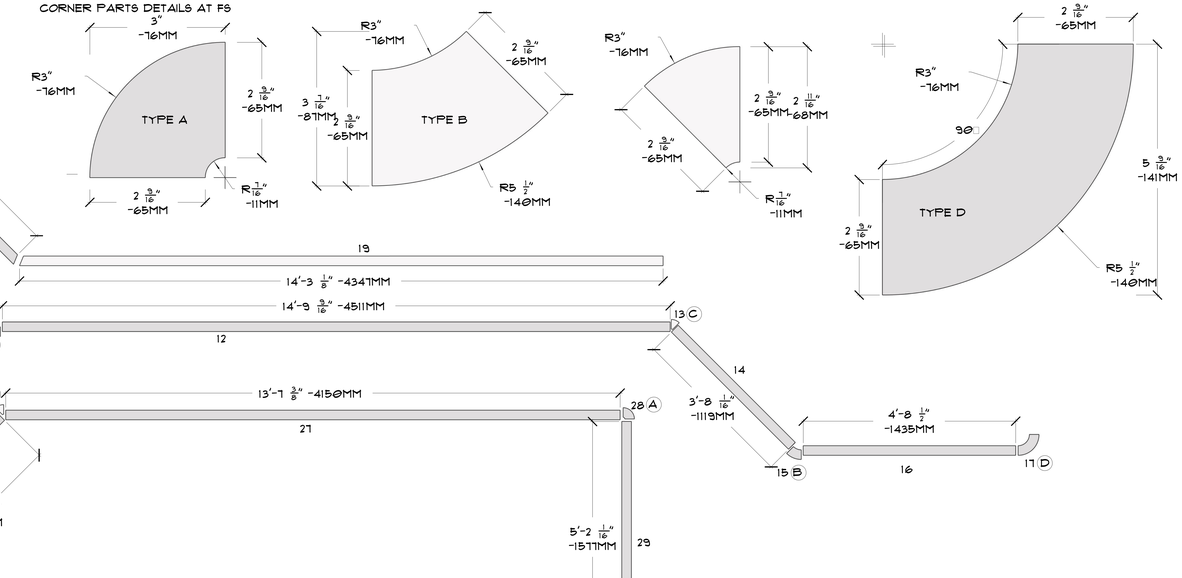

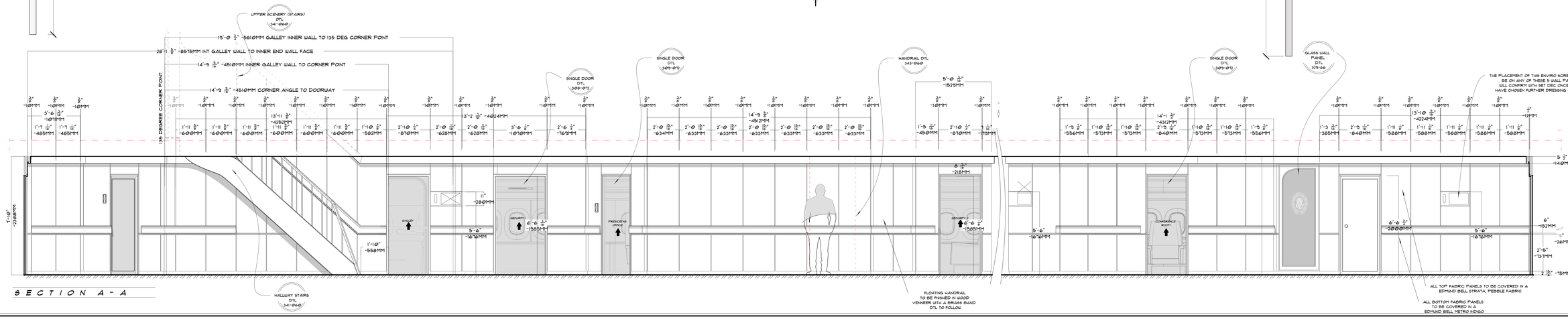

SECTION A-A

AIR FORCE 1
DESIGN: MARCUS RAMOS-MELCON CLICHE
DIRECTOR & FX MANAGER: PRODUCTION DESIGNER WILL HORNBY
SCALE: 1/2"=1'
DATE PRINTED: 19/04/34
DATE: 14/04/2023
DWG NO: 316-072
SHEET NO: 36
SHEET NO: 02